REV	Description	Date
A00	First Issue	2005-MAR-08

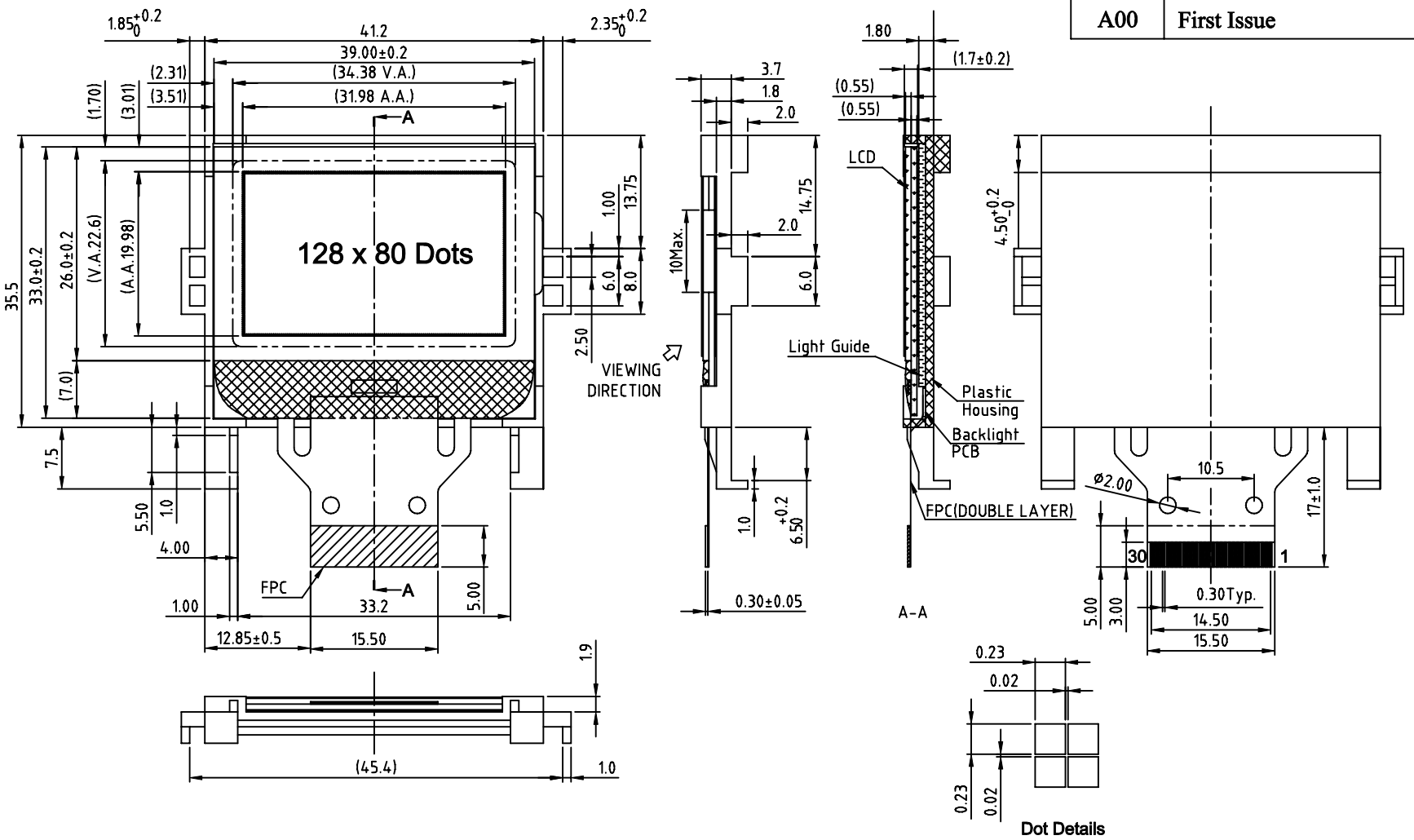

Pin Assignment:

1	A(LED+)
2	VL6
3	VL5
4	VL4
5	VL3
6	VL2
7	C4+
8	C2-
9	C2+
10	C1+
11	C1-
12	C3+
13	VOUT
14	VSS
15	VDD
16~23	DB7~DB0
24	$\overline{RD}$
25	$\overline{WR}$
26	D/$\overline{C}$
27	$\overline{RES}$
28	$\overline{CS}$
29	NC
30	K(LED-)

SPECIFICATIONS:

1)FSTN/+VE/PAPER WHITE/TRANSFLECTIVE
2)1/80 DUTY, 1/10 BIAS, VLCD=11.3 V
3)VIEWING ANGLE= 6 O'CLOCK
4)OP.TEMP.=-20°C TO +70°C
ST.TEMP=-30°C TO +80°C
5) WITH WHITE LED BACKLIGHT,5.0V@20mA
6) LCD Controller/Driver: SSD1821, VDD=2.7 ~ 3.3V

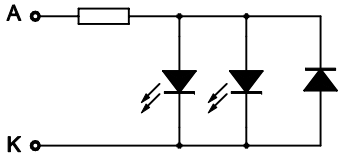

LED Connection

Description:	MECHANICAL SPECIFICATIONS		
Scale:		TRI-T COMPANY LIMITED	
Sheet : 1 of 1			
Unspecified Tol. ±0.3	Unit mm		
Approvals	Date	Project Number TMGG12880-02	Item Number
Draw:			
Check:			
Approve:		Do Not Scale This Drawing	Projection